StickS3

SKU:K150

Description

StickS3 is a compact and high-performance programmable controller designed for remote control and IoT applications. It is powered by the ESP32-S3-PICO-1-N8R8 main control chip, supporting 2.4 GHz Wi-Fi wireless communication, with built-in 8MB Flash and 8MB PSRAM to meet diverse application development needs, delivering excellent performance and scalability.

For human–machine interaction, it features a 1.14" LCD display, a 6-axis IMU sensor, and programmable buttons. The audio system adopts the ES8311 mono audio codec, combined with a high-sensitivity MEMS microphone and AW8737 power amplifier, enabling clear audio capture and high-fidelity audio output, empowering voice recognition and interactive experiences. It also integrates IR transmitter and receiver, a 250mAh lithium battery, making it suitable for smart home control, AI voice assistants, and IoT project development scenarios.

Tutorial

Arduino IDE

This tutorial introduces how to program and control the StickS3 device using the Arduino IDE.

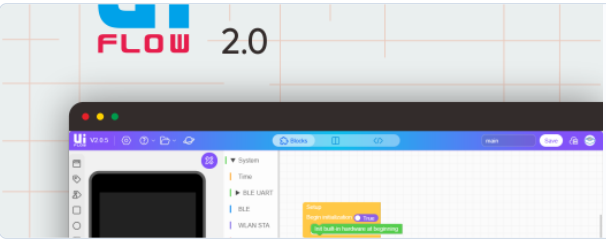

UiFlow2

This tutorial will introduce how to control the StickS3 device through the UiFlow2 graphical programming platform.

StickS3 Xiaozhi Voice Assistant

This tutorial introduces how to use the StickS3 device to flash the Xiaozhi voice assistant firmware via M5Burner and build a personal voice assistant application.

StickS3 ESP-Claw Firmware Flashing

This tutorial introduces how to flash the ESP-Claw firmware onto the StickS3, enabling users to quickly configure their StickS3 as an intelligent terminal capable of AI interaction, hardware programming, and automatio...

Note

EXT_5V_EN Input Power Supply Notice

The device 5V power interface can be configured as DC 5V output / input mode. The interface defaults to input mode. In this state, DC 5V power can be supplied via the Grove interface, the EXT_5V on the top Hat2-Bus, or the 5VIN interface. When configured to output mode, power input is only allowed via USB or the 5VIN on the top Hat2-Bus. Do not supply power through other output interfaces, otherwise there is a risk of short circuit and device damage.

Infrared Reception Notes

1.The infrared receiving and decoding of StickS3 **must use the ESP32 RMT peripheral** and does not support receiving and decoding via GPIO method.
2. When using the infrared receiver function, the speaker amplifier must be turned off; otherwise, reception will not work properly. The operation method can be referenced in the tutorial
3. Ensure that the transmitter and receiver are aligned as directly as possible, and keep a distance of no less than 30 cm between them. If the distance is too short, abnormal reception may occur.

Speaker Volume Notice

When powered by battery (USB not connected), it is recommended to keep the speaker volume below 75% to avoid unexpected device reboot caused by excessive power consumption.

Abnormal Device Noise

Early batches of StickS3 may produce slight abnormal noise after startup, which does not affect functional use.

Precautions for Use

Do not disassemble the product enclosure without authorization. Disassembly may damage the antenna PFC circuit and affect normal device operation.

Features

- Integrated ESP32-S3-PICO-1-N8R8 main controller
- 8MB Flash and 8MB PSRAM
- ES8311 mono audio codec chip

- MEMS microphone + speaker
- Integrated IR transmitter + IR receiver
- Magnetic back design
- Expansion interfaces:
  - Expandable Hat2 bus (2.54-16P)
  - HY2.0-4P interface
- Development Platform
  - Arduino
  - UiFlow2
  - ESP-IDF
  - PlatformIO

Includes

- 1 x StickS3

Applications

- Smart home control
- AI voice assistant
- IoT project development

Specifications

Specification	Parameter
SoC	ESP32-S3-PICO-1-N8R8 @ Xtensa® 32-bit LX7 dual-core processor, clock frequency 240MHz
Flash	8MB
PSRAM	8MB Octal
IMU	BMI270
Wi-Fi	2.4 GHz Wi-Fi
Display	Model: ST7789P3 Resolution: 135x240
Input Power	USB Type-C DC 5V
Audio Codec	ES8311: 24-bit resolution, I2S protocol
Microphone	MEMS microphone, Signal-to-Noise Ratio (SNR): 65 dB
Speaker	AW8737 power amplifier + 8Ω@1W 2011 cavity speaker
Operating Temperature	0 ~ 40°C
Battery Capacity	250mAh
Grove Load Capacity	No load: 5V Max: 4.88V@0.38A
Power Consumption	Power off: 4.2V@14.02uA L1 state: 4.2V@52.47uA L2 state: 4.2V@102.40uA L3A state: 4.2V@36.69mA Full load: 4.2V@519.02mA
Product Size	48.0 x 24.0 x 15.0mm
Product Weight	20.0g
Package Size	65.0 x 25.0 x 15.0mm
Gross Weight	22.4g

Learn

Compatibility Notes

StickS3 is structurally incompatible with the following Hat series products: Hat Mini JoyC (SKU: U156), Hat Mini EncoderC (SKU: U157), and Hat 18650C (SKU: U080).

Download Mode

Connect the device with a USB cable and press and hold the reset button on the side of the device. When the internal green LED flashes, the device has successfully entered download mode.

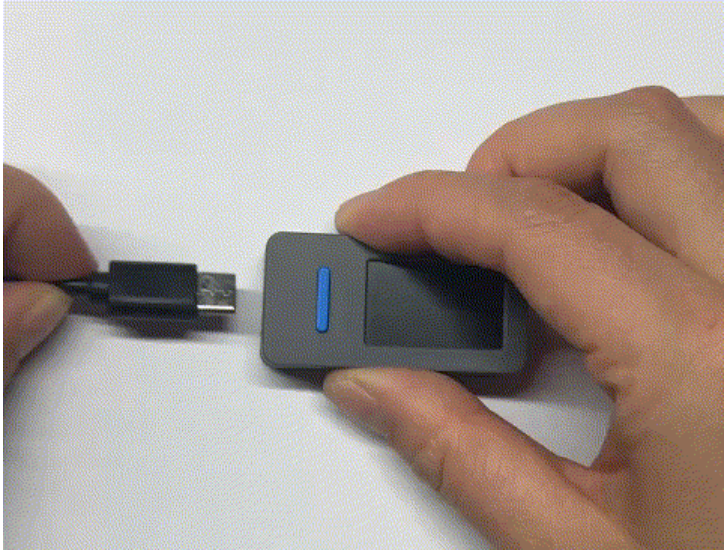

Button Operation Instructions

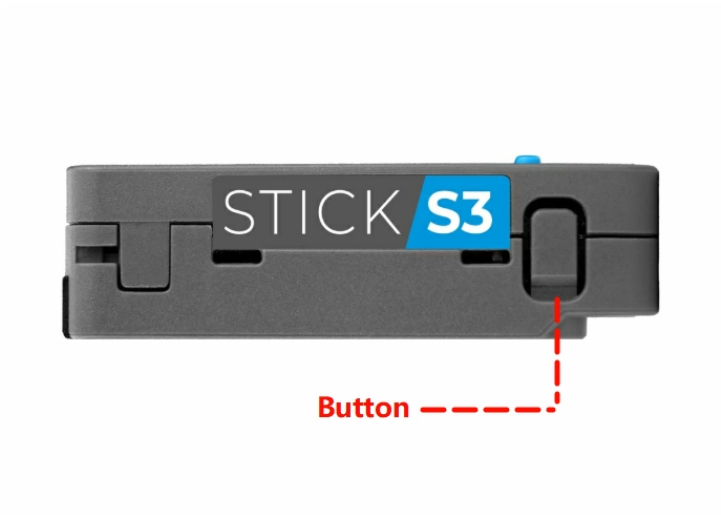

- Long press: Enter download mode
- Double click: Power off
- Single click: Power on / Reset

EXT_5V_EN

In the default initialization of M5Unified, EXT_5V_EN is disabled. This operation turns off the power supply to the Grove, Hat EXT_5V interfaces, and IR TX/RX, and switches them to input mode. In this state, an external 5V power input is required for IR TX/RX to operate properly. For use cases without an external power supply, you can re-enable the EXT_5V output mode through the following API to restore power to IR TX/RX.

```
M5.Power.setExtOutput(true); // EXT_5V OUTPUT
// M5.Power.setExtOutput(false); // EXT_5V INPUT
```

IMU Triaxial Direction Schematic Diagram

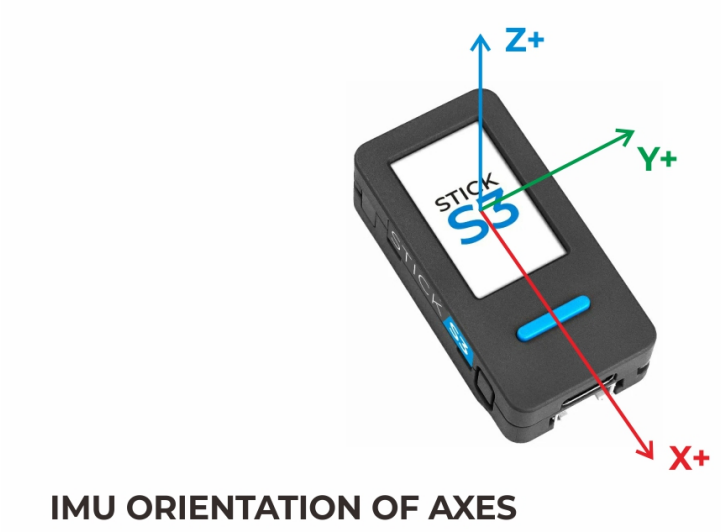

IMU ORIENTATION OF AXES

Schematics

- StickS3 Schematics PDF

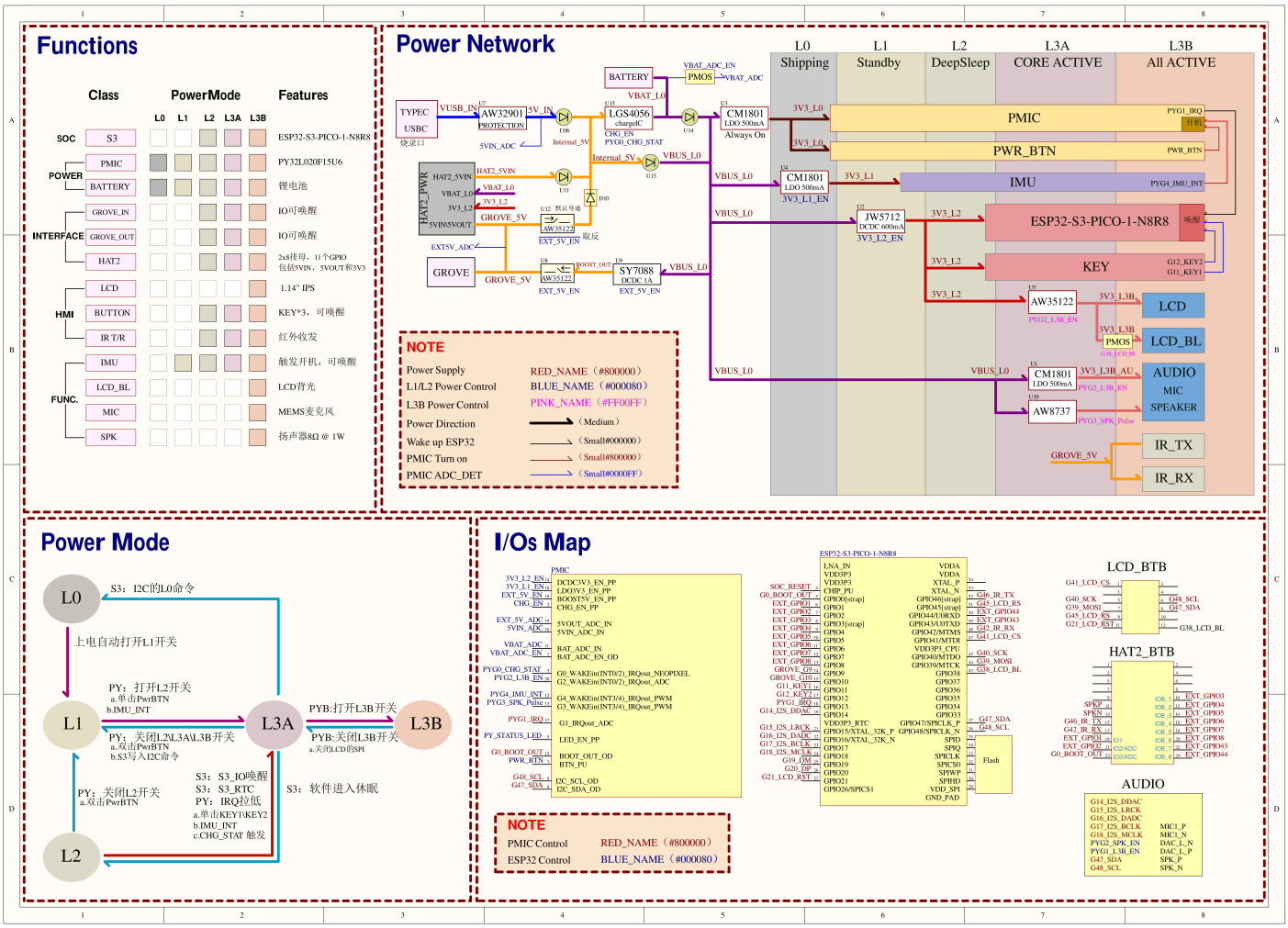

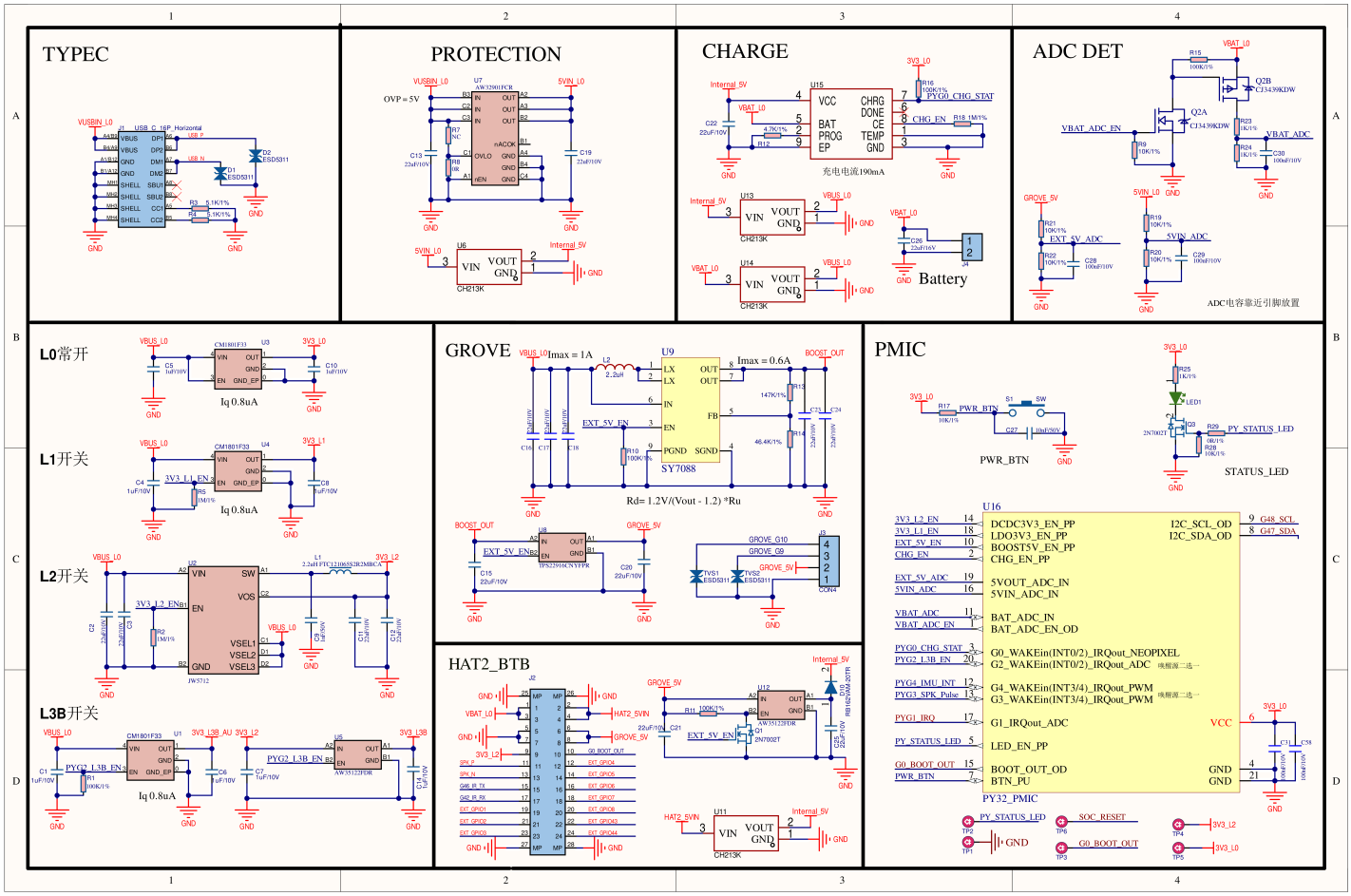
TYPEC
PROTECTION
CHARGE
ADC DET
L0常开
L1开关
L2开关
L3B开关
GROVE
PMIC
HAT2_BTB
Battery
充电电流190mA
ADC电容靠近引脚放置
PWR_BTN
STATUS_LED
PY32_PMIC
Iq 0.8uA
Rd= 1.2V/(Vout - 1.2) *Ru

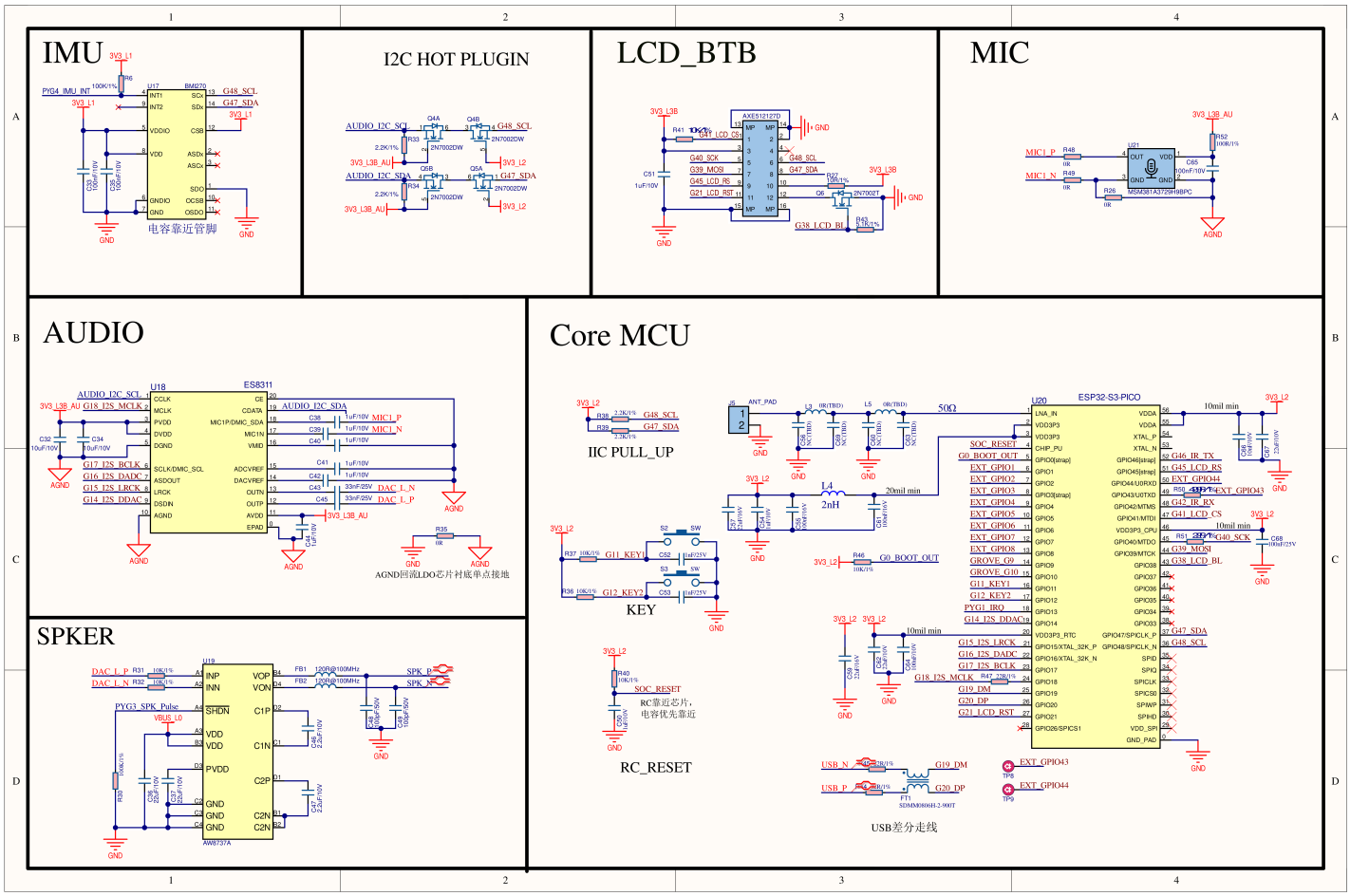
IMU
I2C HOT PLUGIN
LCD_BTB
MIC
AUDIO
Core MCU
SPKER
电容靠近管脚
IIC PULL_UP
KEY
RC_RESET
USB差分走线
RC靠近芯片，电容优先靠近

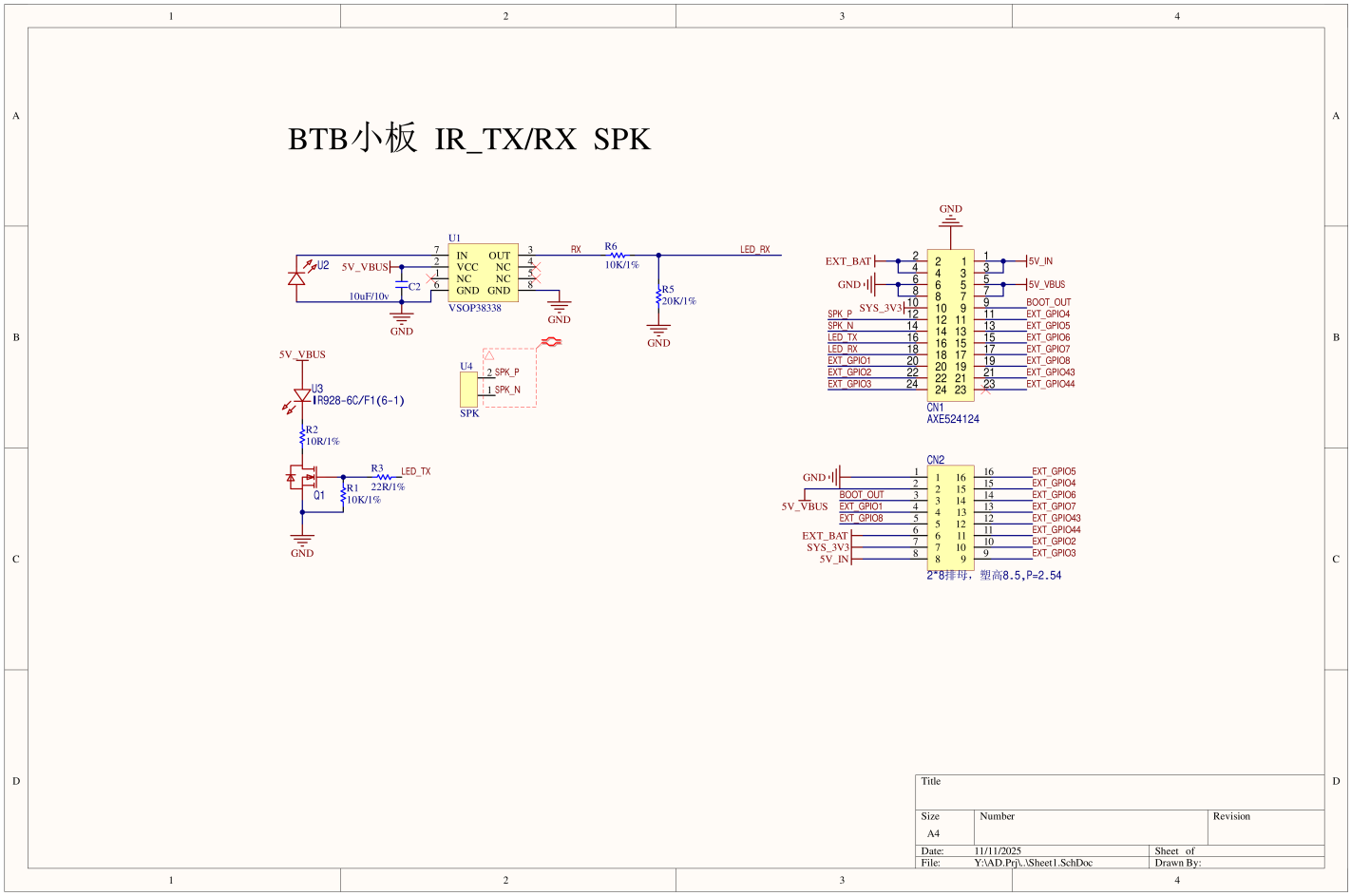

PinMap

LCD

ESP32-S3	G39	G40	G45	G41	G21	G38
ST7789P3	MOSI	SCK	RS	CS	RST	BL

IMU & M5PM1

ESP32-S3	G48	G47
BMI270 (0x68)	SCL	SDA
M5PM1 (0x6e)	SCL	SDA

M5PM1

M5PM1	G0	G1	G2	G3	G4
Battery Charge	PYG0_CHG_STAT				
ESP32-S3		G13			
L3B Power			PYG2_L3B_EN		
Speaker				PYG3_SPK_Pulse	
IMU INT					PYG4_IMU_INT

Audio

ESP32-S3	G18	G14	G17	G15	G16	G48	G47
ES8311 (0x18)	MCLK	DOUT	BCLK	LRCK	DIN	SCL	SDA

Button

ESP32-S3	G11	G12
KEY1	Input	
KEY2		Input

IR

ESP32-S3	G46	G42
IR	IR_TX	IR_RX

HY2.0-4P

- PORT.A

HY2.0-4P	Black	Red	Yellow	White
PORT.CUSTOM	GND	5V	G9	G10

Hat2-Bus

PIN	LEFT	RIGHT	PIN
GND	1	2	G5
EXT_5V	3	4	G4
Boot	5	6	G6
G1	7	8	G7
G8	9	10	G43
BAT	11	12	G44
3V3_L2	13	14	G2
5V_IN	15	16	G3

Model Size

- StickS3 Model Size PDF

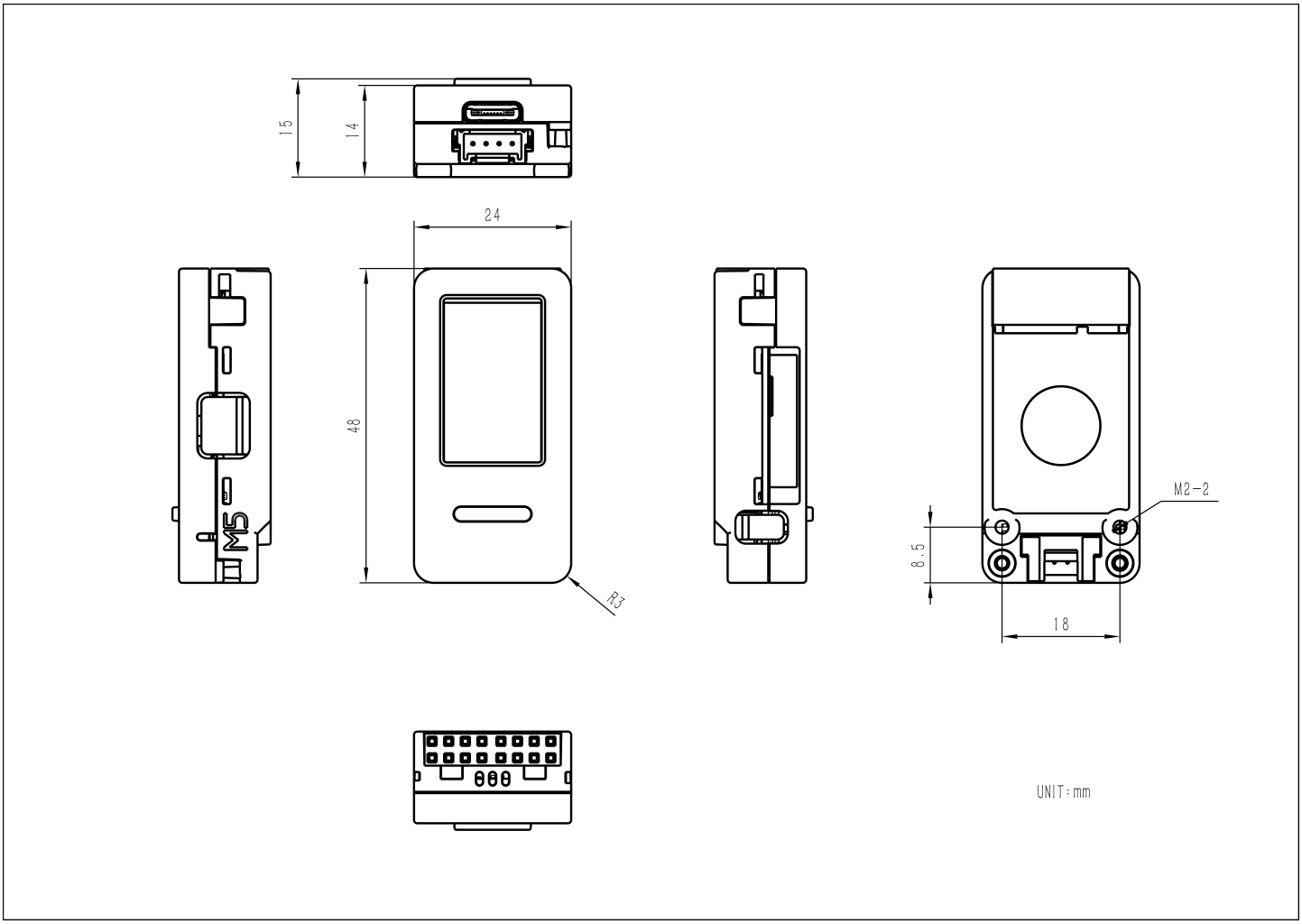

Structure

- StickS3 Structure Files

Datasheets

- ESP32S3
- ES8311
- BMI270

Softwares

Quick Start

- StickS3 ESP-Claw Firmware Flashing
- StickS3 AIFlow Quick Start

Arduino

- StickS3 Arduino Quick Start
- StickS3 M5PM1 Power Management
- M5PM1 Arduino Library
- StickS3 Arduino M5Unified Driver Library
- StickS3 Arduino M5GFX Driver Library

UiFlow2

- StickS3 UiFlow2 Quick Start

Protocol

- M5PM1 Power Management Chip

Other

- StickS3 Xiaozhi Voice Assistant

PlatformIO

```
[env:m5stack-sticks3]
platform = espressif32@6.12.0
board = esp32-s3-devkitc-1
framework = arduino
board_build.arduino.partitions = default_8MB.csv
board_build.arduino.memory_type = qio_opi
build_flags =
    -DESP32S3
    -DBOARD_HAS_PSRAM
    -mfix-esp32-psram-cache-issue
    -DCORE_DEBUG_LEVEL=5
    -DARDUINO_USB_CDC_ON_BOOT=1
    -DARDUINO_USB_MODE=1
lib_deps =
    M5Unified=https://github.com/m5stack/M5Unified
    M5PM1=https://github.com/m5stack/M5PM1
```

Video

Product Comparison

If you need to compare information for Stick series products, you can visit the Product Selector, select the target products, and obtain the comparison results. The selector covers key information such as core parameters and functional features, and supports simultaneous comparison of multiple products.